Arc Flash Analysis Advanced Topics

Topics

- Differential Relays
- Arc Flash Detectors
- Maintenance Mode
- Analysis of Results
- Troubleshooting FCT problems

Differential Relays

- Generator Differential Protection
- Transformer Differential Protection
- Bus Differential Protection

Gen Differential Relay

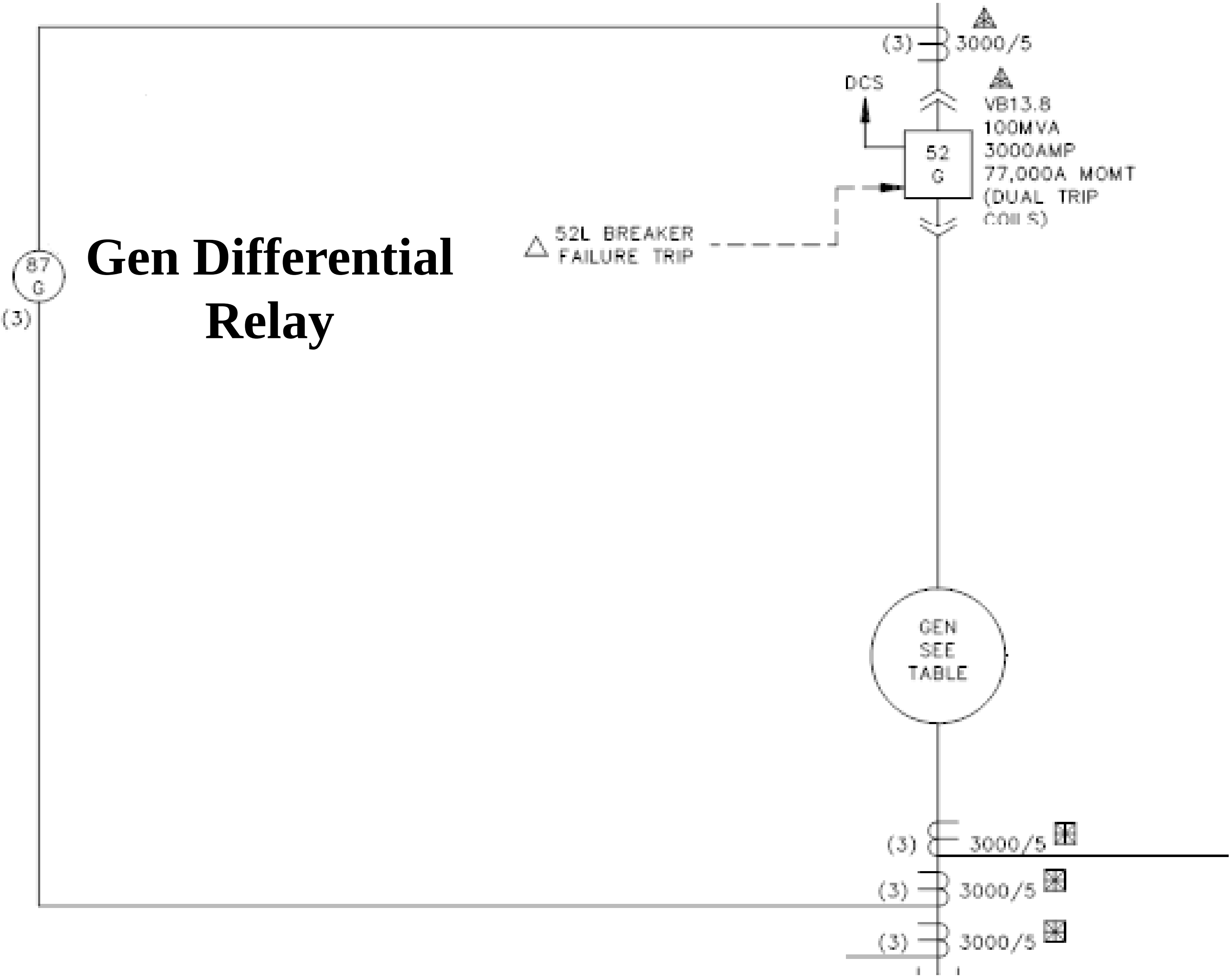
(3)
3000/5
DCS
VB13.8
100MVA
3000AMP
77,000A MOMT
(DUAL TRIP
COILS)
52
G
52L BREAKER
FAILURE TRIP
87
G
(3)
GEN
SEE
TABLE
(3)
3000/5
(3)
3000/5
(3)
3000/5

Transformer Differential Relay

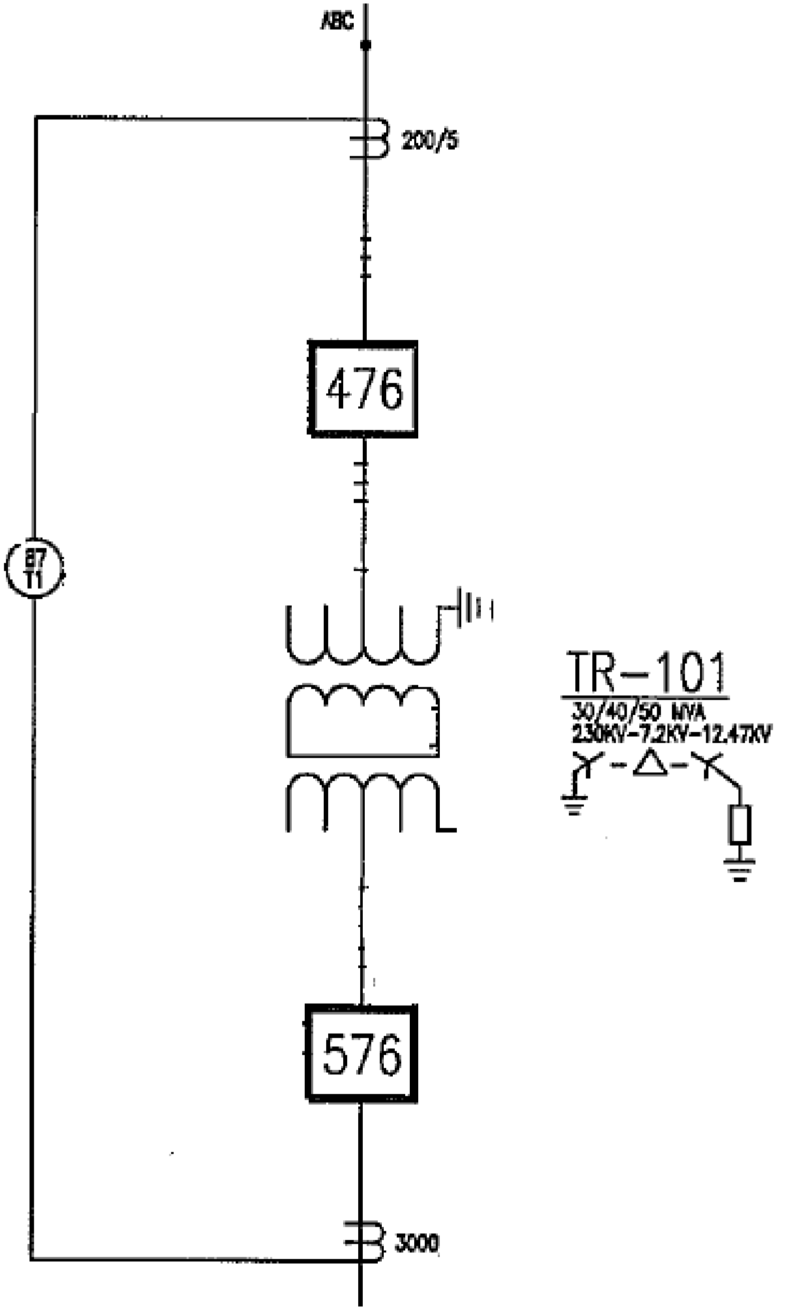
ABC
200/5
476
87
T1
TR-101
30/40/50 MVA
230KV-7.2KV-12.47KV
576
3000

Bus Differential Relay

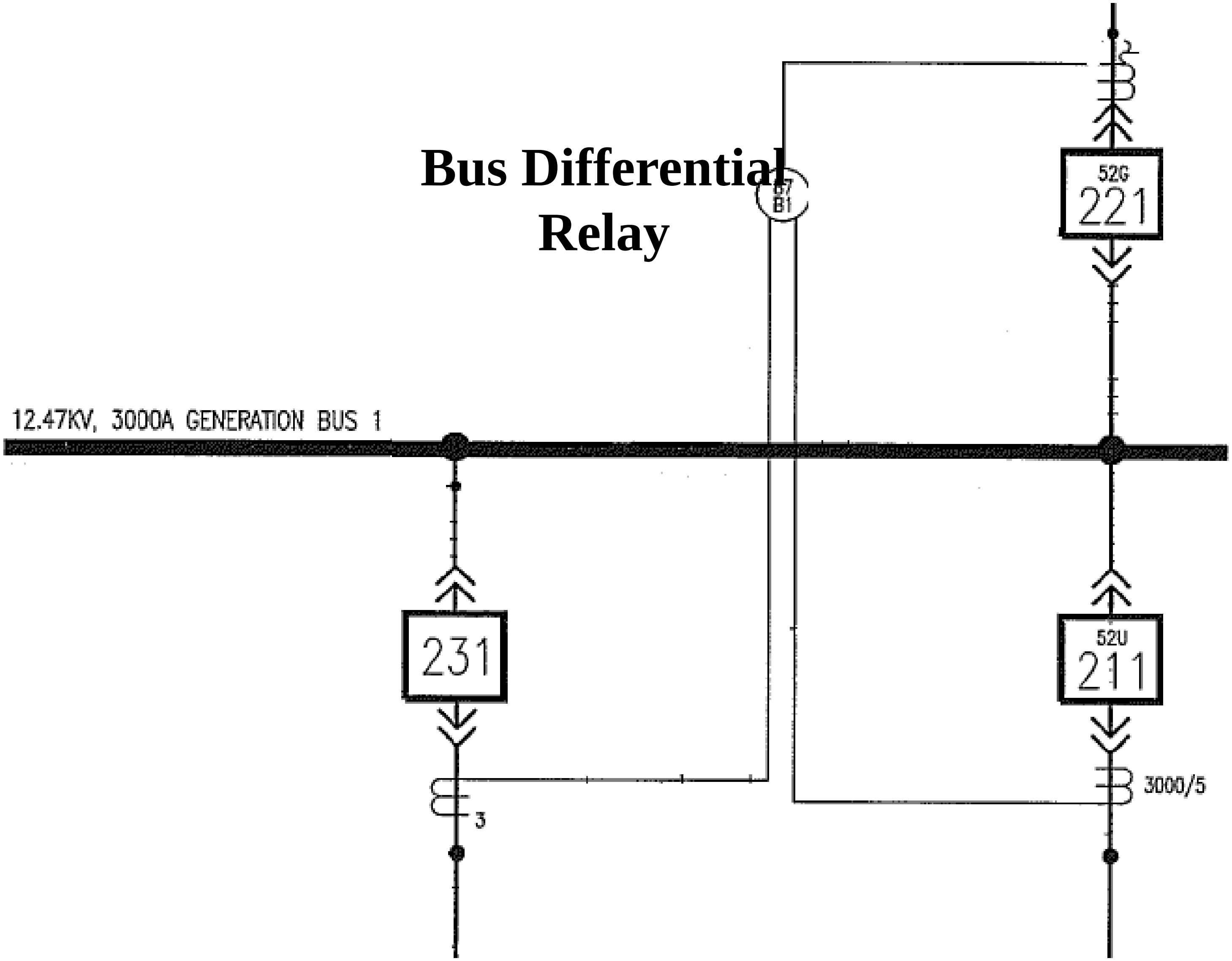
2
87
B1
52G
221
12.47KV, 3000A GENERATION BUS 1
231
52U
211
3000/5
3

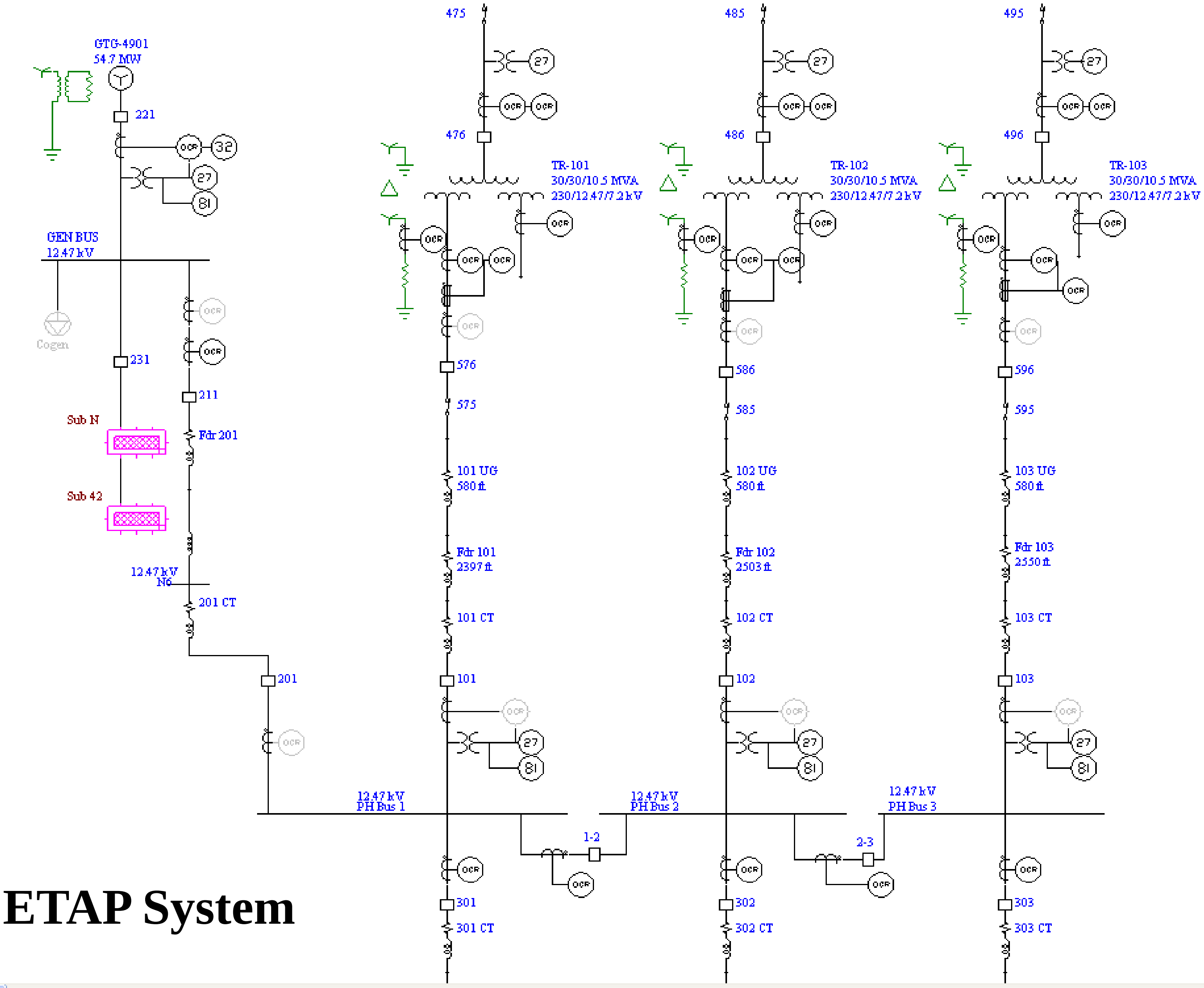
GTG-4901
54.7 MW
221
OCR
32
27
81
GEN BUS
12.47 kV
Cogen
231
Sub N
Sub 42
211
Fdr 201
12.47 kV
N6
201 CT
201
475
476
TR-101
30/30/10.5 MVA
230/12.47/7.2 kV
576
575
101 UG
580 ft
Fdr 101
2397 ft
101 CT
101
12.47 kV
PH Bus 1
1-2
301
301 CT
485
486
TR-102
30/30/10.5 MVA
230/12.47/7.2 kV
586
585
102 UG
580 ft
Fdr 102
2503 ft
102 CT
102
12.47 kV
PH Bus 2
2-3
302
302 CT
495
496
TR-103
30/30/10.5 MVA
230/12.47/7.2 kV
596
595
103 UG
580 ft
Fdr 103
2550 ft
103 CT
103
12.47 kV
PH Bus 3
303
303 CT

ETAP System

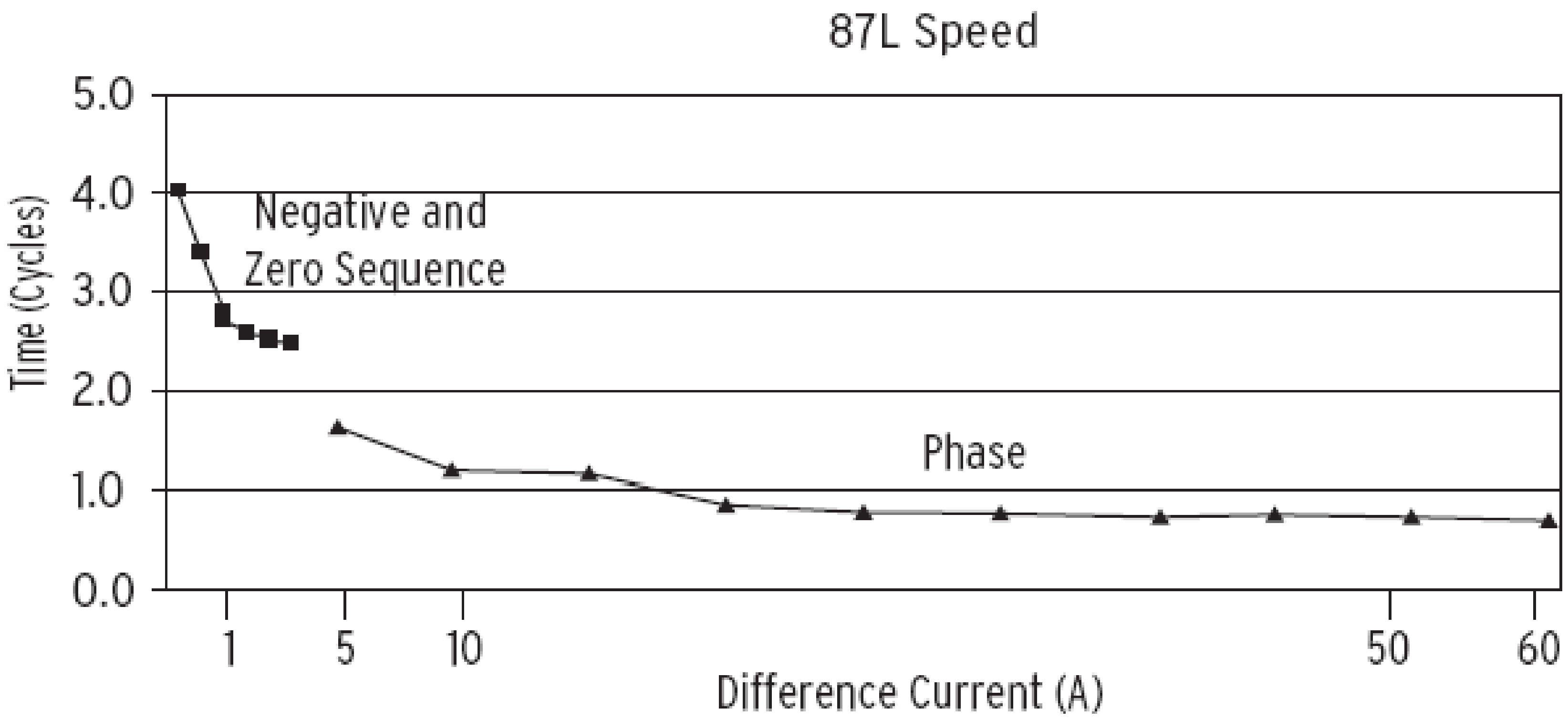

Figure 9 Current Differential Element Trip Times

Arc Flash Detectors (Light)

- Define the Enclosures
- Define which Enclosures have Arc Sensors
- Determine the Definite time for Relay to Trip
- Combination of Overcurrent and Light Detection

Enclosures

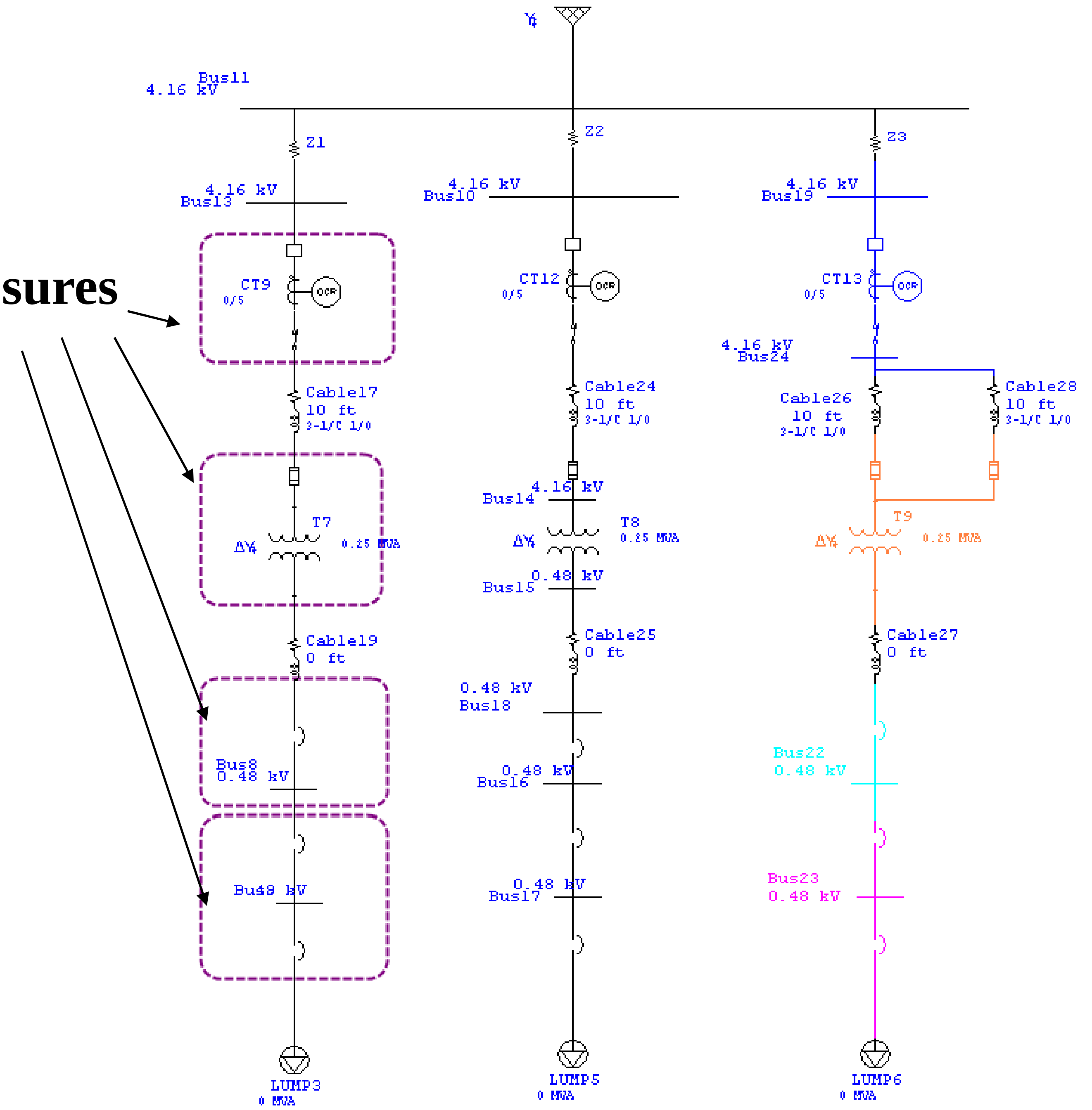

U1
Bus11
4.16 kV
Z1
Z2
Z3
4.16 kV
Bus13
4.16 kV
Bus10
4.16 kV
Bus19
CT9
0/5
OCR
CT12
0/5
OCR
CT13
0/5
OCR
4.16 kV
Bus24
Cable17
10 ft
3-1/C 1/0
Cable24
10 ft
3-1/C 1/0
Cable26
10 ft
3-1/C 1/0
Cable28
10 ft
3-1/C 1/0
4.16 kV
Bus14
T7
ΔY
0.25 MVA
T8
ΔY
0.25 MVA
T9
ΔY
0.25 MVA
0.48 kV
Bus15
Cable19
0 ft
Cable25
0 ft
Cable27
0 ft
0.48 kV
Bus18
Bus8
0.48 kV
0.48 kV
Bus16
Bus22
0.48 kV
Bu48 kV
0.48 kV
Bus17
Bus23
0.48 kV
LUMP3
0 MVA
LUMP5
0 MVA
LUMP6
0 MVA

Light Sensor and Overcurrent Relay Combination

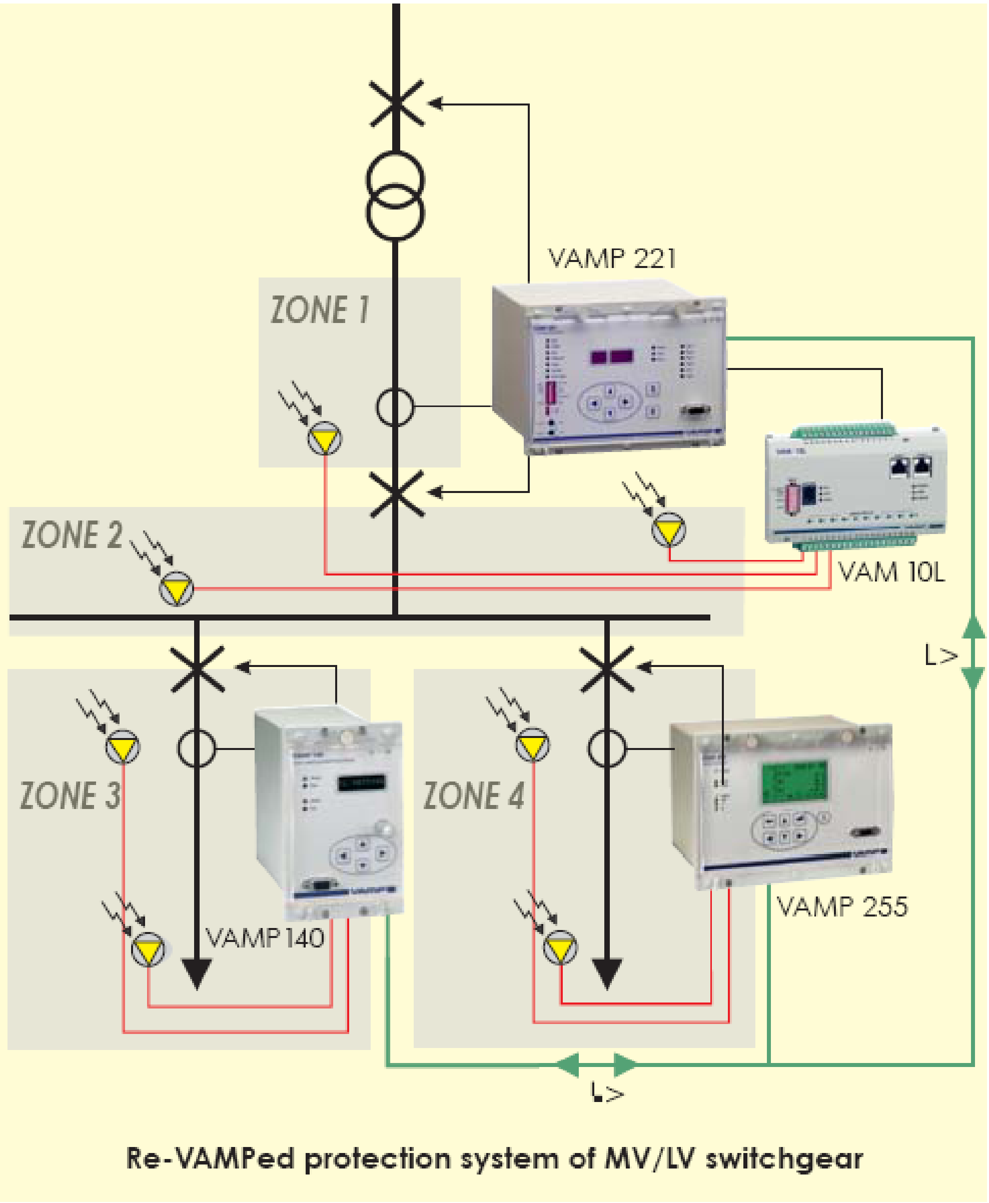
VAMP 221
ZONE 1
ZONE 2
VAM 10L
L>
ZONE 3
ZONE 4
VAMP 140
VAMP 255
L>

Re-VAMPed protection system of MV/LV switchgear

Light Sensor Only

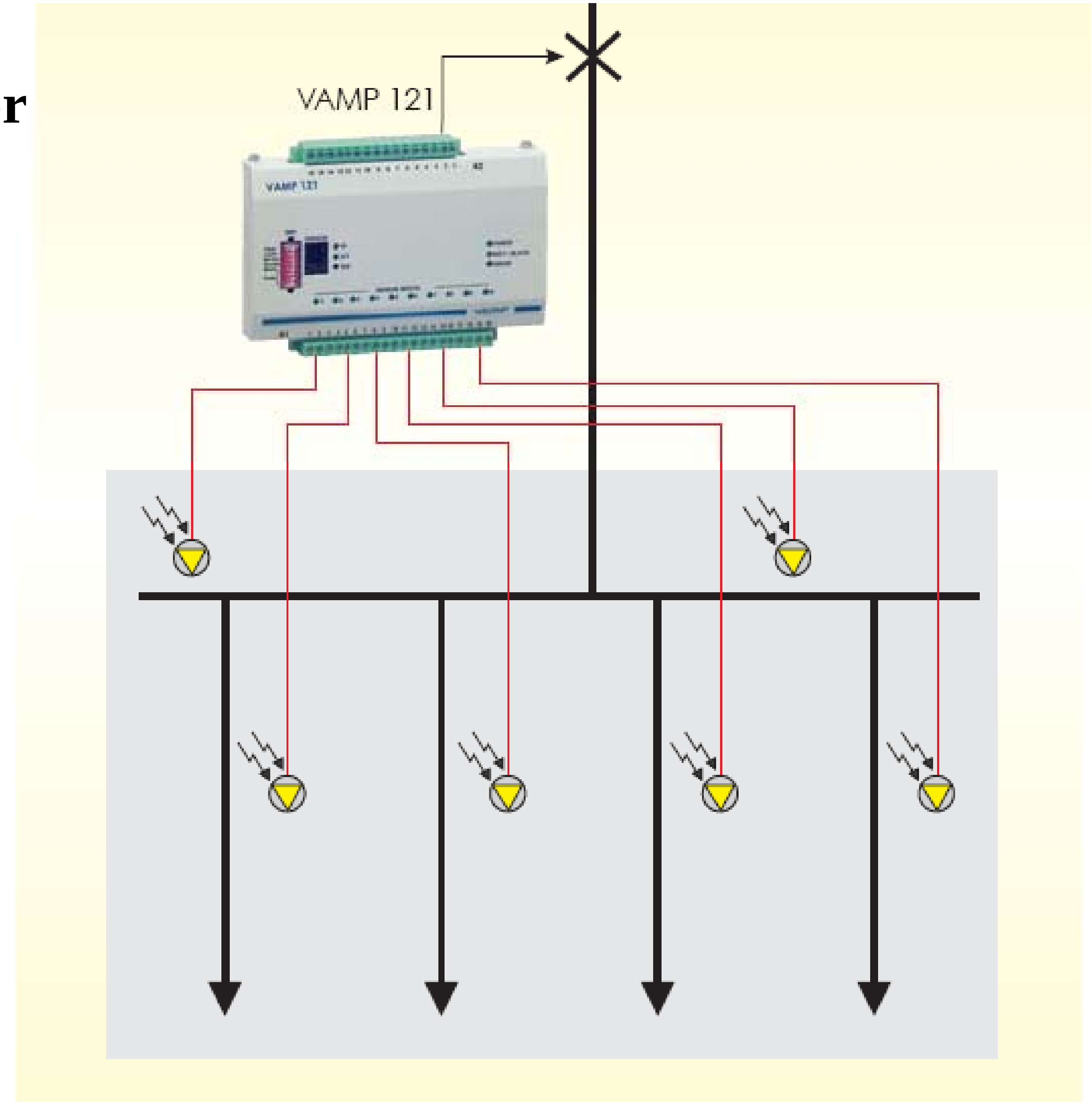

Maintenance Modes

- Reduce the Fault Clearing Time (FCT)
- Reduce the Incident Energy
- Make Energized Work Safer

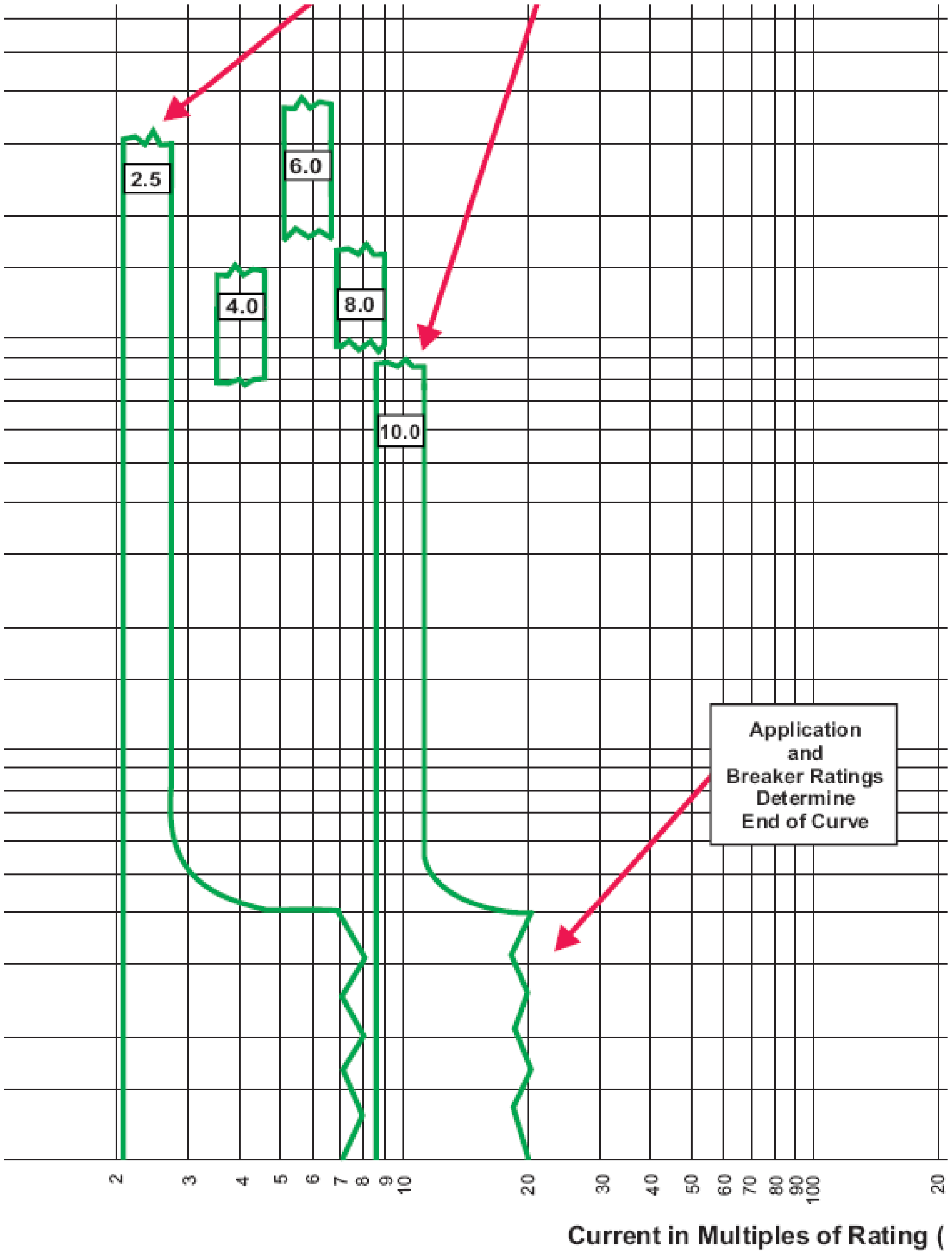

Application
and
Breaker Ratings
Determine
End of Curve

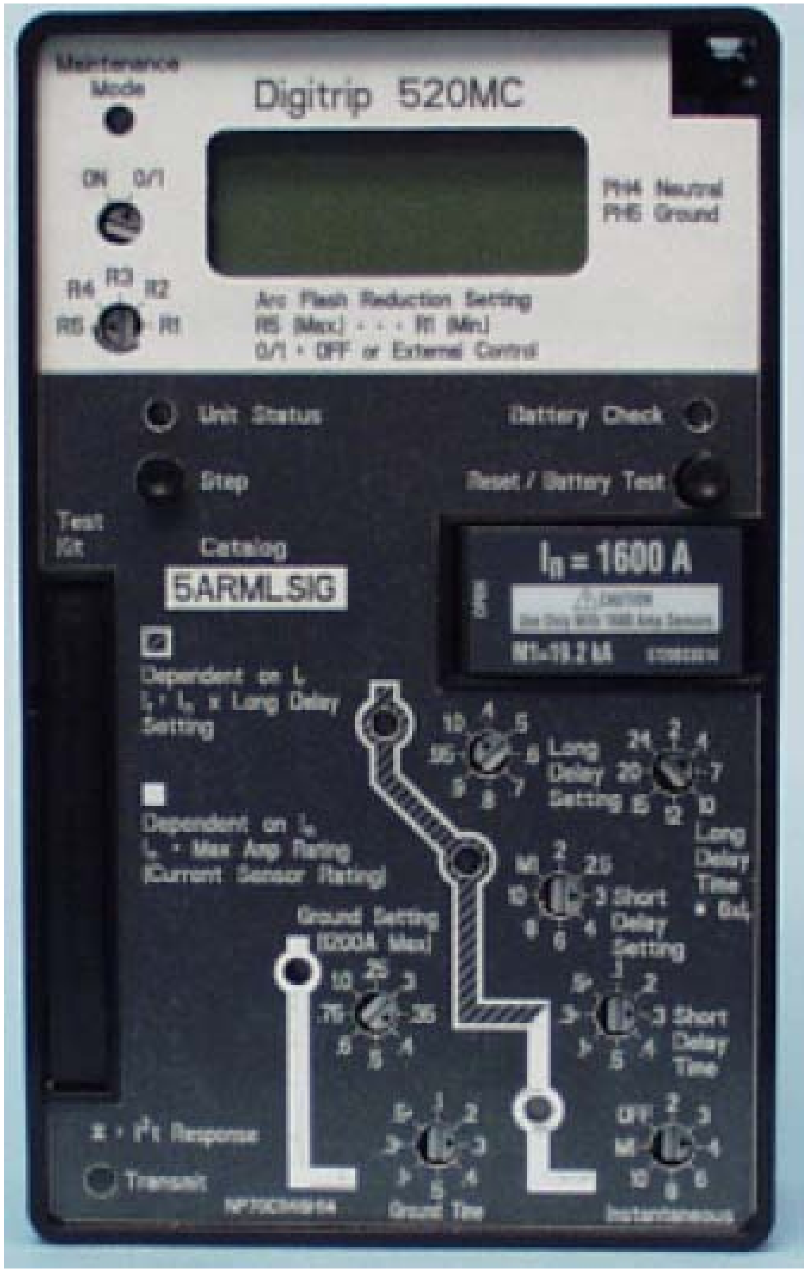
Maintenance Mode
Digitrip 520MC
ON 0/1
R4 R3 R2
R5 R1
PH4 Neutral
PH5 Ground
Arc Flash Reduction Setting
R5 (Max) - - - R1 (Min)
0/1 - OFF or External Control
Unit Status
Battery Check
Step
Reset / Battery Test
Test Kit
Catalog
5ARMLSIG
I_n = 1600 A
Dependent on I_r
Long Delay Setting
Dependent on I_n
Max Amp Rating (Current Sensor Rating)
Long Delay Setting
Long Delay Time
Short Delay Setting
Short Delay Time
Ground Setting (1200A Max)
Ground Time
Instantaneous
I^2t Response
Transmit

Maintenance

Mode

Normal Operating Mode

Normal Operating Mode

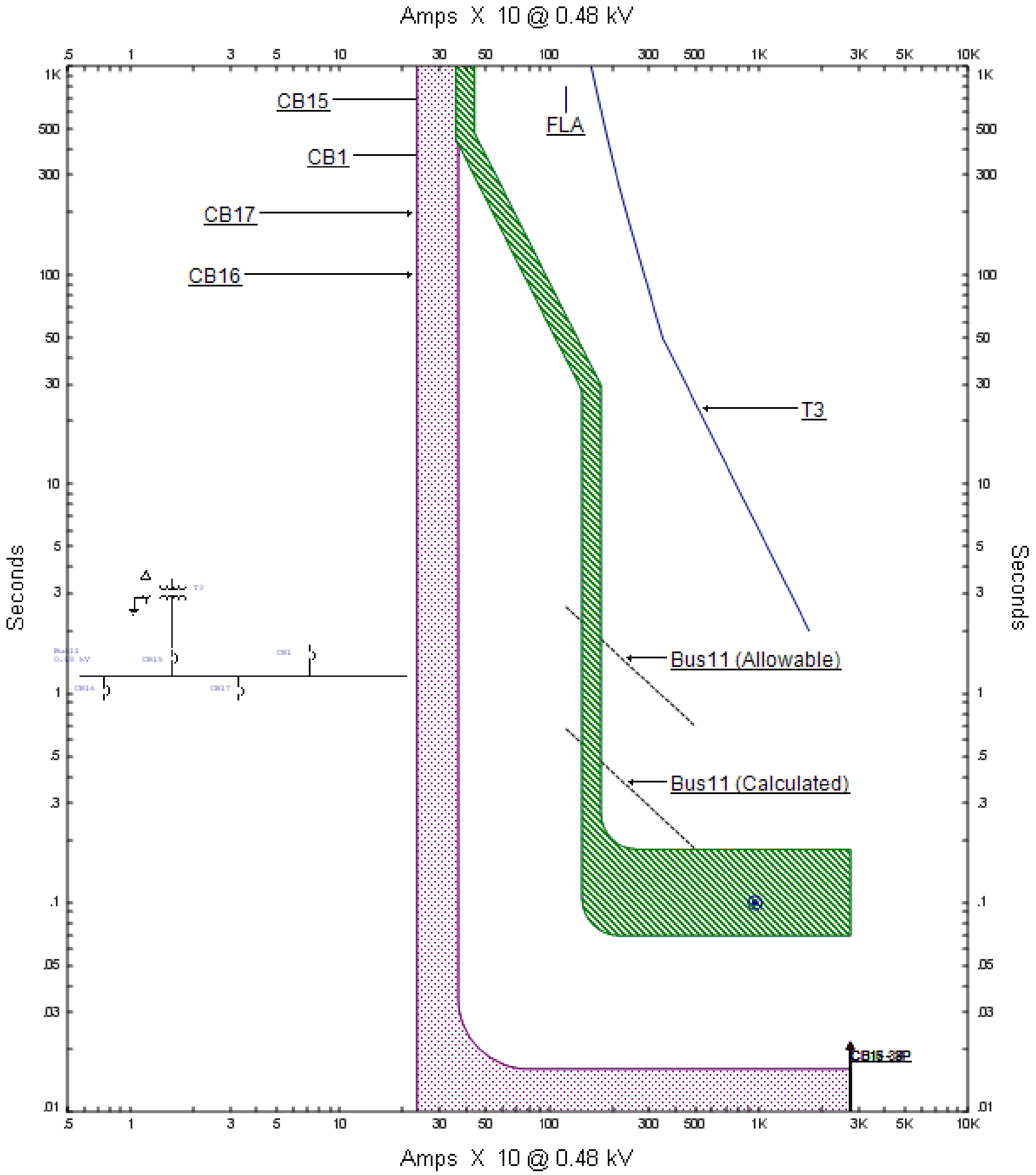

Normal Operating Mode

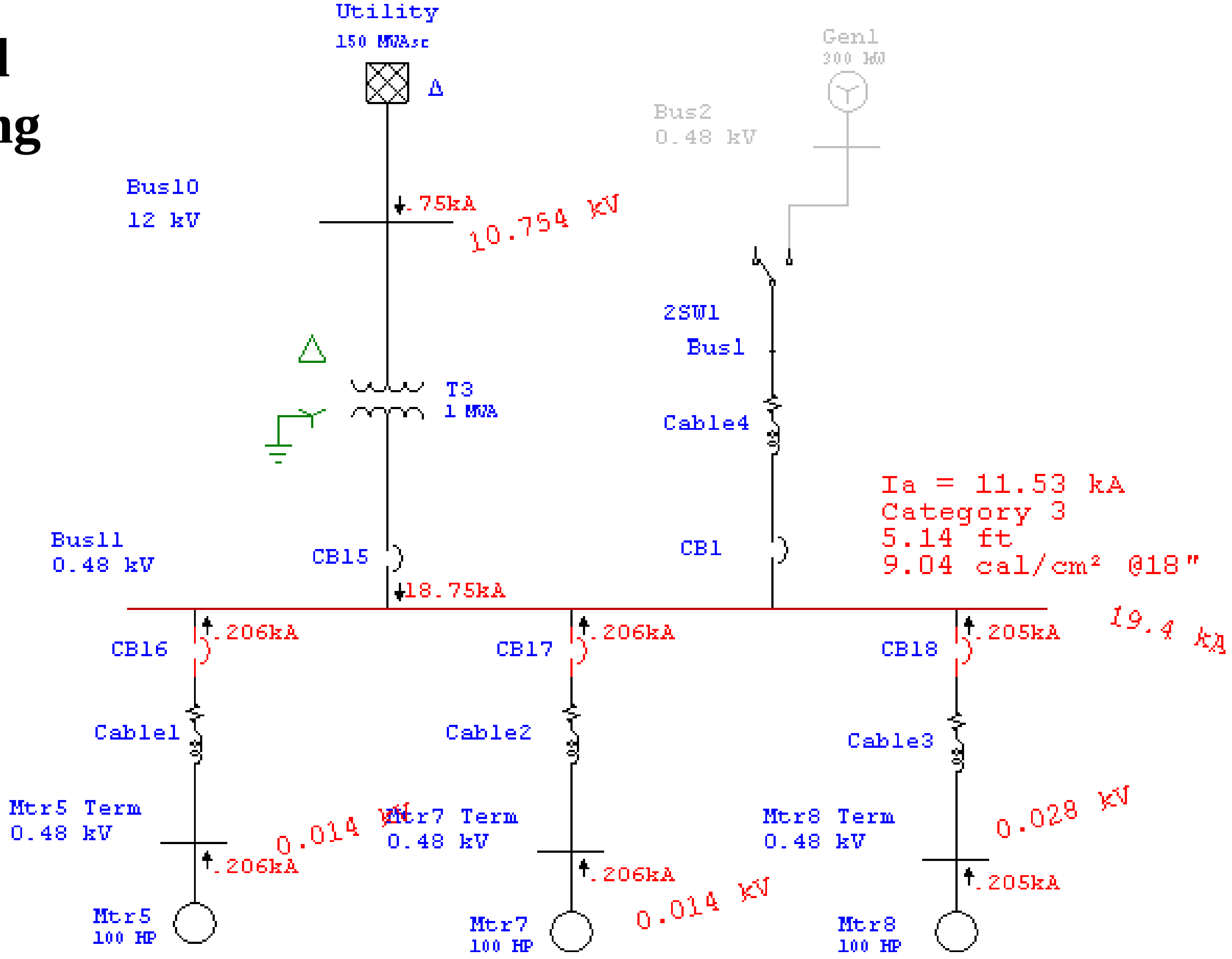
Utility
150 MVAsc
Gen1
300 kW
Bus2
0.48 kV
Bus10
12 kV
.75kA
10.754 kV
2SW1
Bus1
T3
1 MVA
Cable4
Ia = 11.53 kA
Category 3
5.14 ft
9.04 cal/cm² @18"
Bus11
0.48 kV
CB15
CB1
18.75kA
.206kA
.206kA
.205kA
19.4 kA
CB16
CB17
CB18
Cable1
Cable2
Cable3
Mtr5 Term
0.48 kV
0.014 kV
Mtr7 Term
0.48 kV
Mtr8 Term
0.48 kV
0.028 kV
.206kA
.206kA
.205kA
Mtr5
100 HP
Mtr7
100 HP
0.014 kV
Mtr8
100 HP

Maintenance Mode

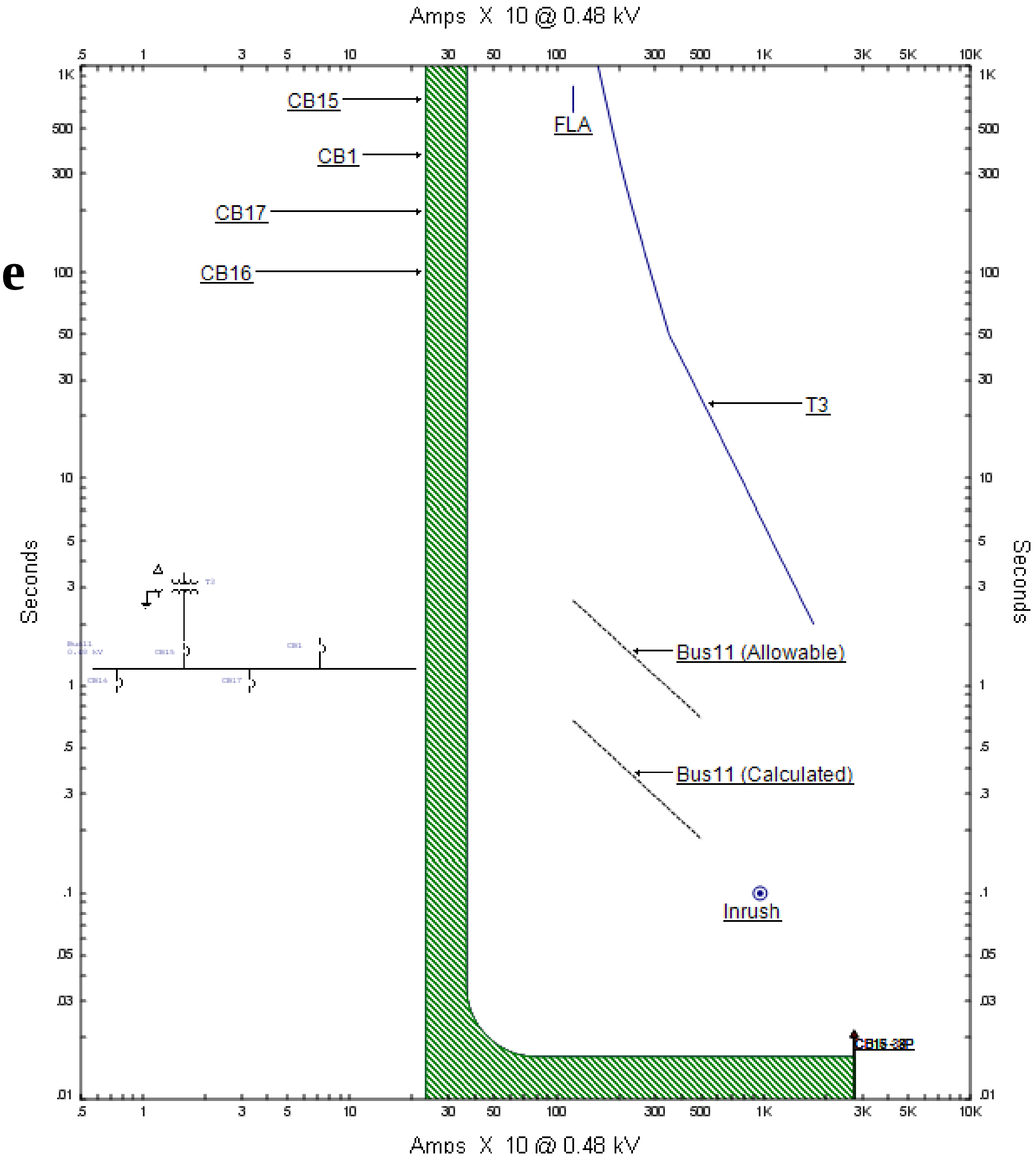

Maintenance Mode

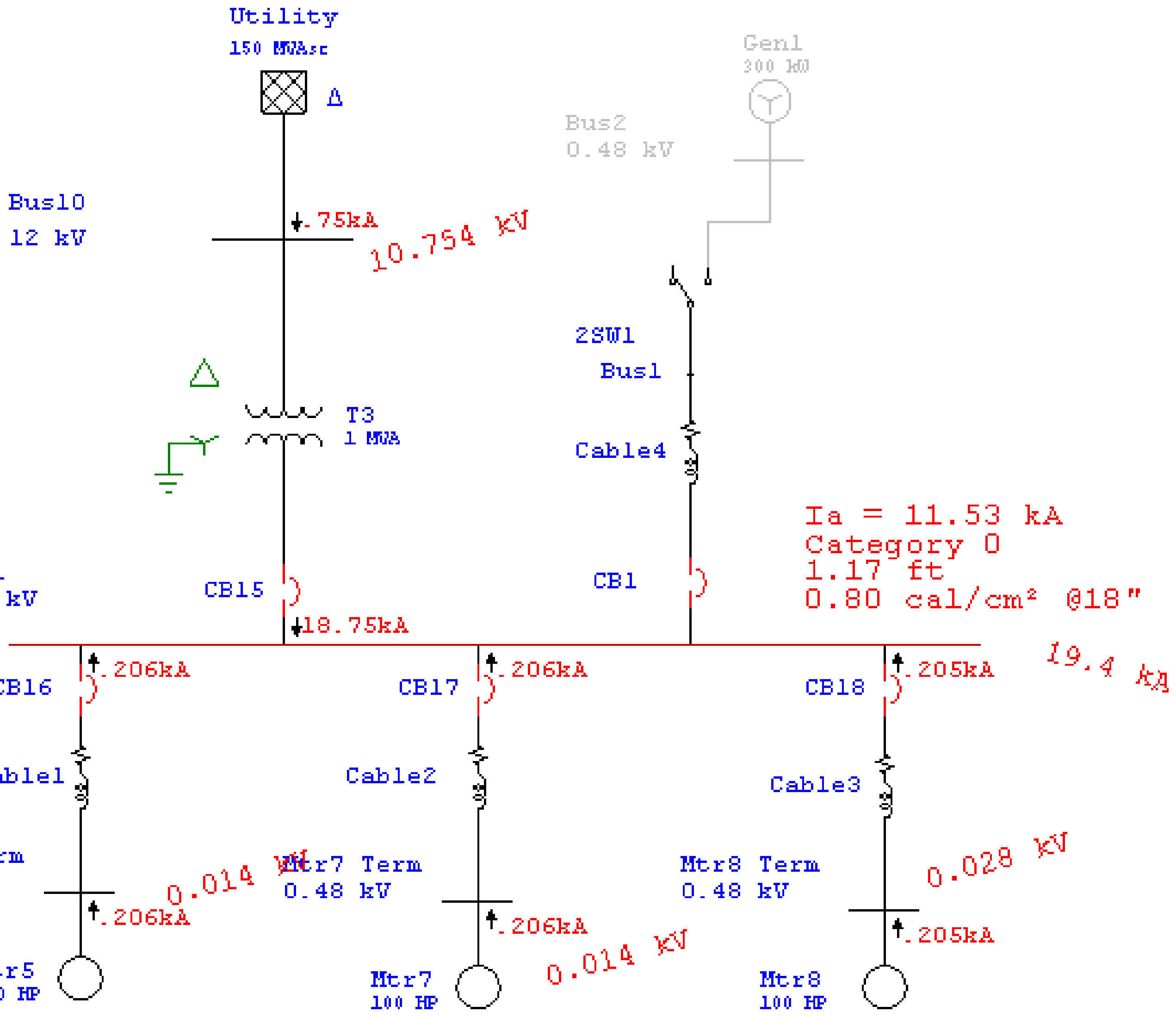

Utility
150 MVAsc
Gen1
300 kW
Bus2
0.48 kV
Bus10
12 kV
.75kA
10.754 kV
2SW1
Bus1
T3
1 MVA
Cable4
Ia = 11.53 kA
Category 0
1.17 ft
0.80 cal/cm² @18"
Bus11
0.48 kV
CB15
CB1
18.75kA
CB16
.206kA
CB17
.206kA
CB18
.205kA
19.4 kA
Cable1
Cable2
Cable3
Mtr5 Term
0.48 kV
0.014 kV
Mtr7 Term
0.48 kV
Mtr8 Term
0.48 kV
0.028 kV
.206kA
.206kA
.205kA
0.014 kV
Mtr5
100 HP
Mtr7
100 HP
Mtr8
100 HP

Analysis of Results

- Consider all Configurations
- Consider all Scenarios
- Generate MS Excel Reports
- Analyze Results for PDs and Buses
- Determine the Worst-Case Incident Energy
- Prepare the Data for Creating the Labels

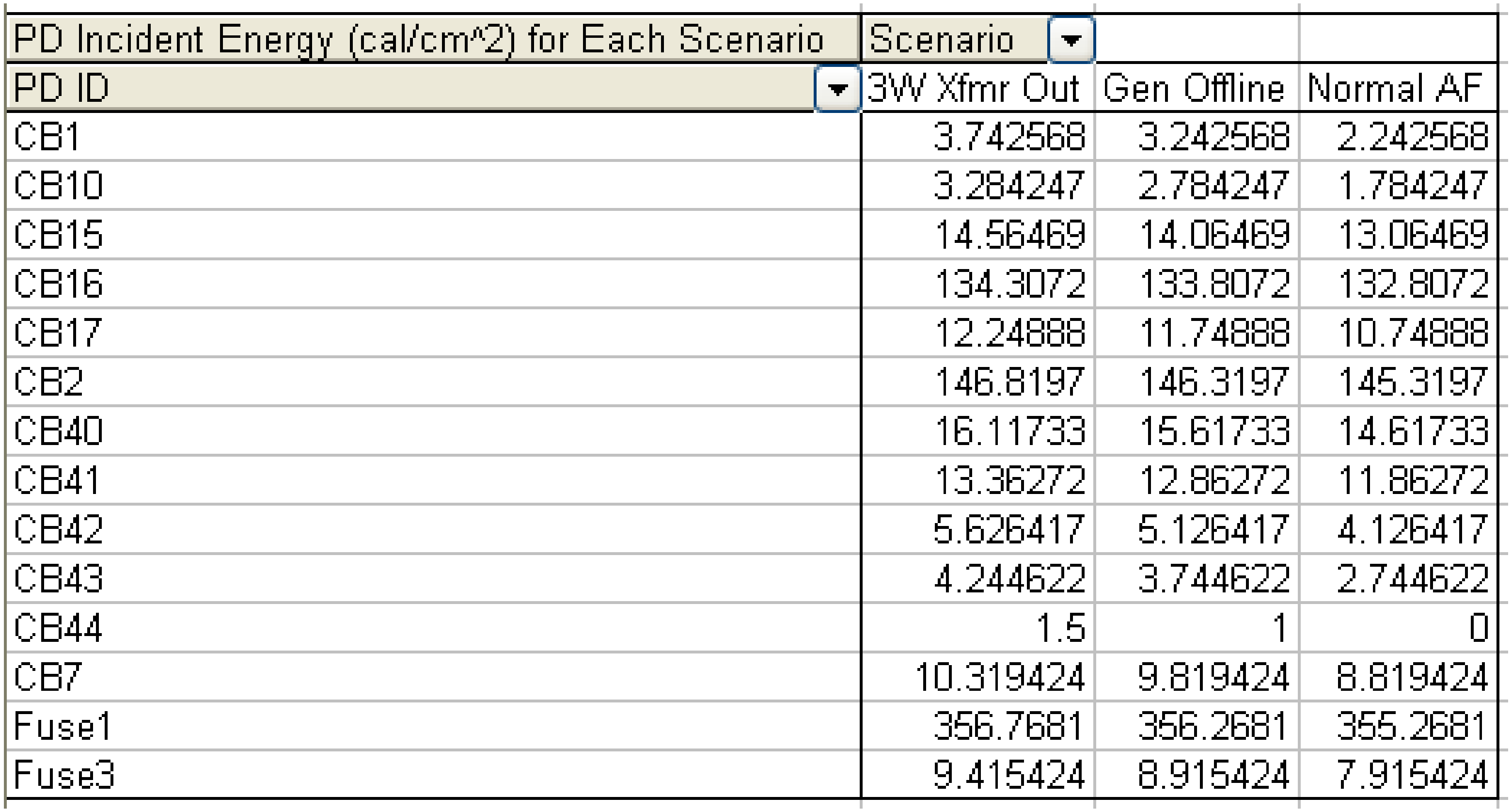

PD Incident Energy (cal/cm^2) for Each Scenario	Scenario ▼		
PD ID ▼	3W Xfmr Out	Gen Offline	Normal AF
CB1	3.742568	3.242568	2.242568
CB10	3.284247	2.784247	1.784247
CB15	14.56469	14.06469	13.06469
CB16	134.3072	133.8072	132.8072
CB17	12.24888	11.74888	10.74888
CB2	146.8197	146.3197	145.3197
CB40	16.11733	15.61733	14.61733
CB41	13.36272	12.86272	11.86272
CB42	5.626417	5.126417	4.126417
CB43	4.244622	3.744622	2.744622
CB44	1.5	1	0
CB7	10.319424	9.819424	8.819424
Fuse1	356.7681	356.2681	355.2681
Fuse3	9.415424	8.915424	7.915424

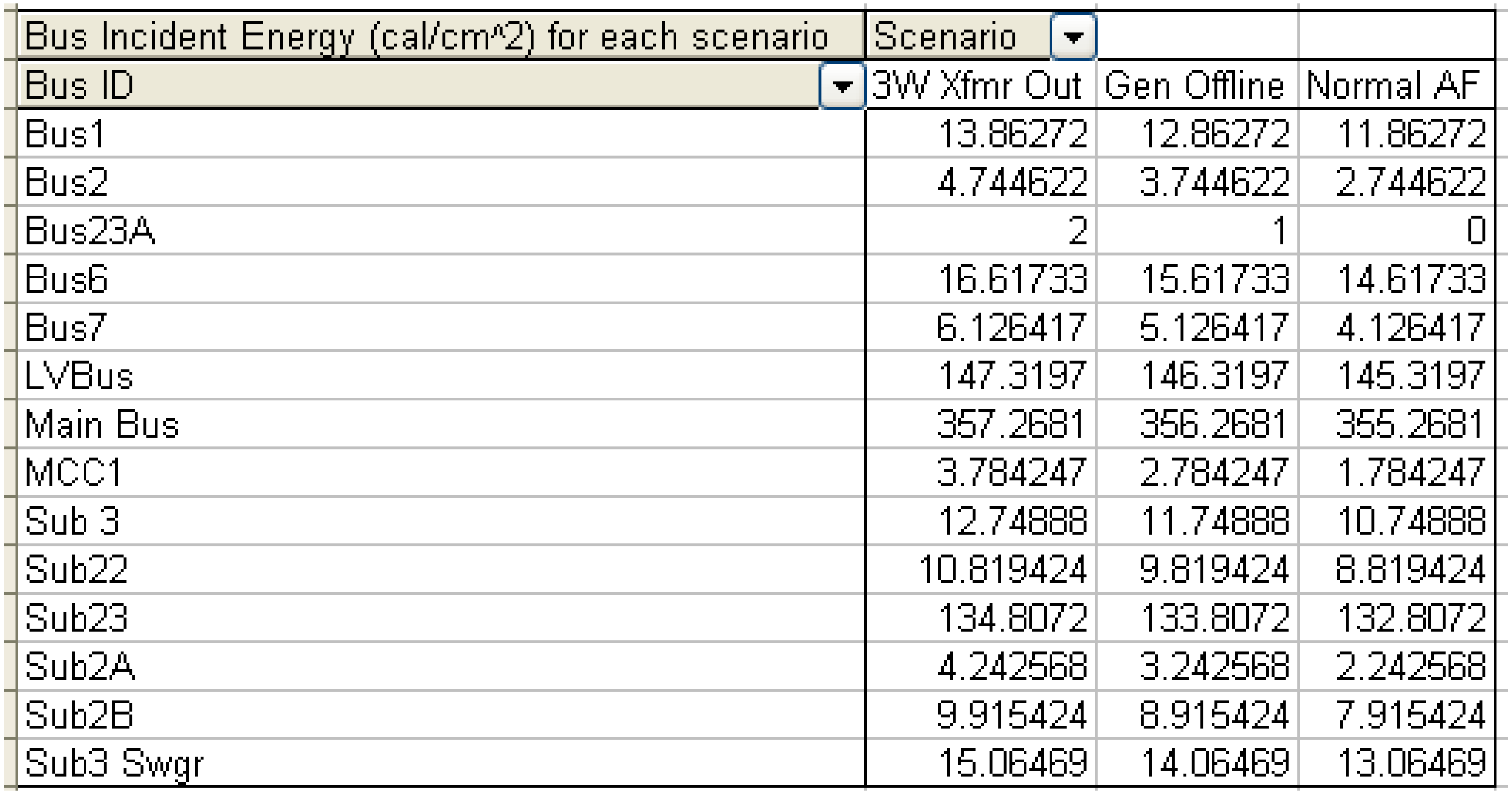

Bus Incident Energy (cal/cm^2) for each scenario	Scenario		
Bus ID	3W Xfmr Out	Gen Offline	Normal AF
Bus1	13.86272	12.86272	11.86272
Bus2	4.744622	3.744622	2.744622
Bus23A	2	1	0
Bus6	16.61733	15.61733	14.61733
Bus7	6.126417	5.126417	4.126417
LVBus	147.3197	146.3197	145.3197
Main Bus	357.2681	356.2681	355.2681
MCC1	3.784247	2.784247	1.784247
Sub 3	12.74888	11.74888	10.74888
Sub22	10.819424	9.819424	8.819424
Sub23	134.8072	133.8072	132.8072
Sub2A	4.242568	3.242568	2.242568
Sub2B	9.915424	8.915424	7.915424
Sub3 Swgr	15.06469	14.06469	13.06469

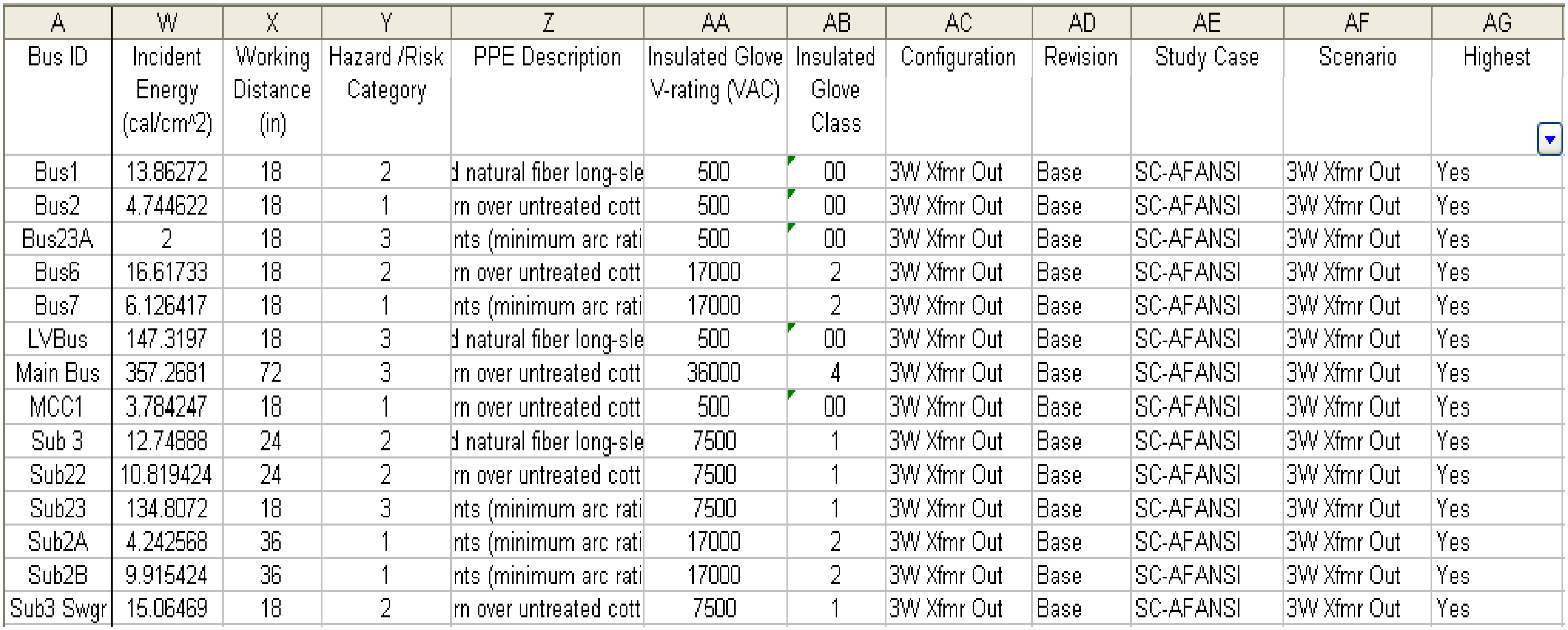

A	W	X	Y	Z	AA	AB	AC	AD	AE	AF	AG
Bus ID	Incident Energy (cal/cm^2)	Working Distance (in)	Hazard /Risk Category	PPE Description	Insulated Glove V-rating (VAC)	Insulated Glove Class	Configuration	Revision	Study Case	Scenario	Highest
Bus1	13.86272	18	2	d natural fiber long-sle	500	00	3W Xfmr Out	Base	SC-AFANSI	3W Xfmr Out	Yes
Bus2	4.744622	18	1	rn over untreated cott	500	00	3W Xfmr Out	Base	SC-AFANSI	3W Xfmr Out	Yes
Bus23A	2	18	3	nts (minimum arc rati	500	00	3W Xfmr Out	Base	SC-AFANSI	3W Xfmr Out	Yes
Bus6	16.61733	18	2	rn over untreated cott	17000	2	3W Xfmr Out	Base	SC-AFANSI	3W Xfmr Out	Yes
Bus7	6.126417	18	1	nts (minimum arc rati	17000	2	3W Xfmr Out	Base	SC-AFANSI	3W Xfmr Out	Yes
LVBus	147.3197	18	3	d natural fiber long-sle	500	00	3W Xfmr Out	Base	SC-AFANSI	3W Xfmr Out	Yes
Main Bus	357.2681	72	3	rn over untreated cott	36000	4	3W Xfmr Out	Base	SC-AFANSI	3W Xfmr Out	Yes
MCC1	3.784247	18	1	rn over untreated cott	500	00	3W Xfmr Out	Base	SC-AFANSI	3W Xfmr Out	Yes
Sub 3	12.74888	24	2	d natural fiber long-sle	7500	1	3W Xfmr Out	Base	SC-AFANSI	3W Xfmr Out	Yes
Sub22	10.819424	24	2	rn over untreated cott	7500	1	3W Xfmr Out	Base	SC-AFANSI	3W Xfmr Out	Yes
Sub23	134.8072	18	3	nts (minimum arc rati	7500	1	3W Xfmr Out	Base	SC-AFANSI	3W Xfmr Out	Yes
Sub2A	4.242568	36	1	nts (minimum arc rati	17000	2	3W Xfmr Out	Base	SC-AFANSI	3W Xfmr Out	Yes
Sub2B	9.915424	36	1	nts (minimum arc rati	17000	2	3W Xfmr Out	Base	SC-AFANSI	3W Xfmr Out	Yes
Sub3 Swgr	15.06469	18	2	rn over untreated cott	7500	1	3W Xfmr Out	Base	SC-AFANSI	3W Xfmr Out	Yes

Important Definitions

- **Bolted Fault Current:** 3-Phase Short-circuit current used to determine the arcing current
- **Arcing Current:** current that flows in the event of an arc fault and is typically less than the available SC current
- **Source Protective Device:** The upstream PD that energizes a given bus. Multiple fed buses must have multiple source PDs
- **FCT:** Fault clearing time of the last protective device to clear an arc fault (the FCT can only be determined from source PDs

Why the FCT cannot be Determined

1. The protective device (PD) interlocks have not been properly configured or library selection has not been made for fuse relay, etc.
2. Arcing current is too low and source PD does not trip
3. The source PD is outside the search capability
4. The source PD is outside the reach of maximum number of upstream search levels

Why the FCT cannot be Determined

5. The bolted Short-circuit current is outside the range allowed by IEEE
6. The bus nominal kV is outside the range allowed by IEEE
7. The user-defined bus FCT is set to zero

1.a PDS are missing

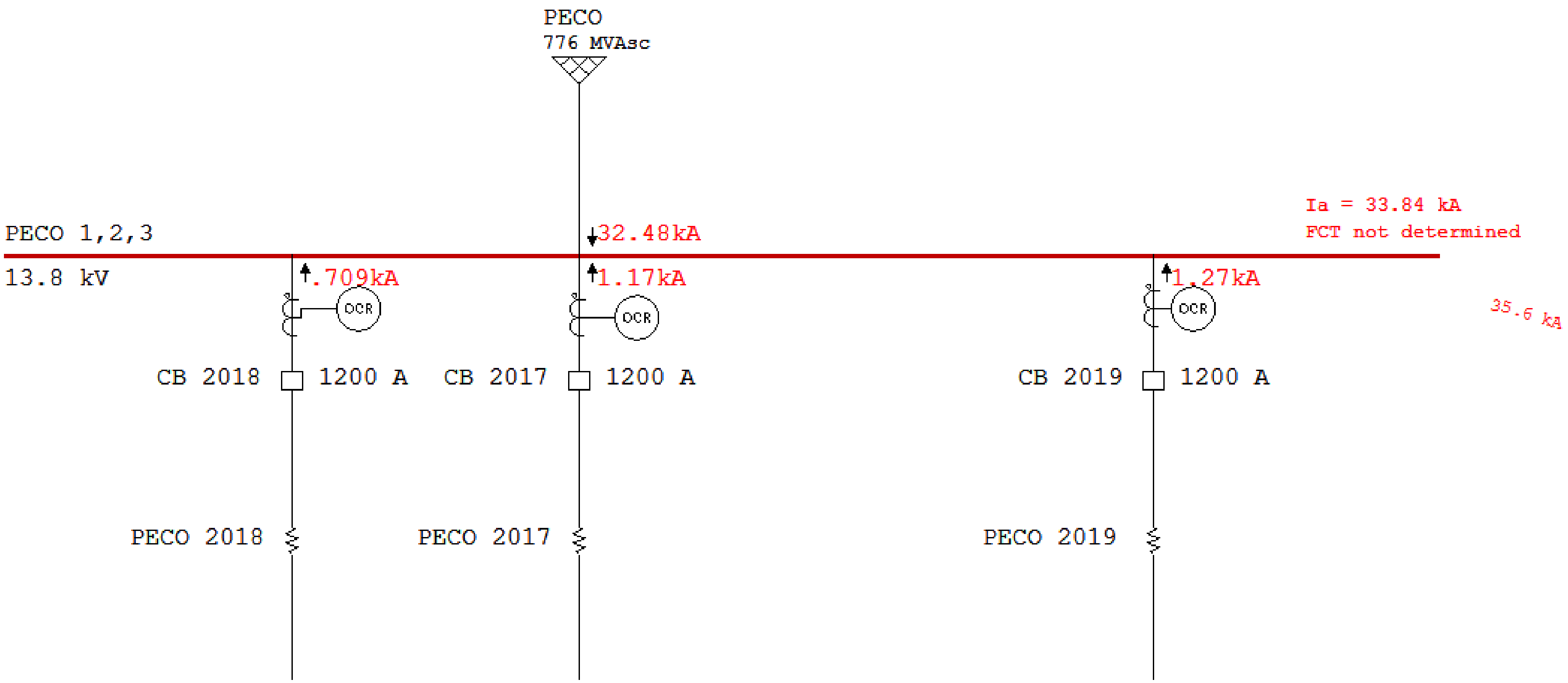
PECO
776 MVAsc
PECO 1,2,3
13.8 kV
32.48kA
Ia = 33.84 kA
FCT not determined
.709kA
1.17kA
1.27kA
35.6 kA
OCR
OCR
OCR
CB 2018
1200 A
CB 2017
1200 A
CB 2019
1200 A
PECO 2018
PECO 2017
PECO 2019

1.b PDS are missing Interlocks

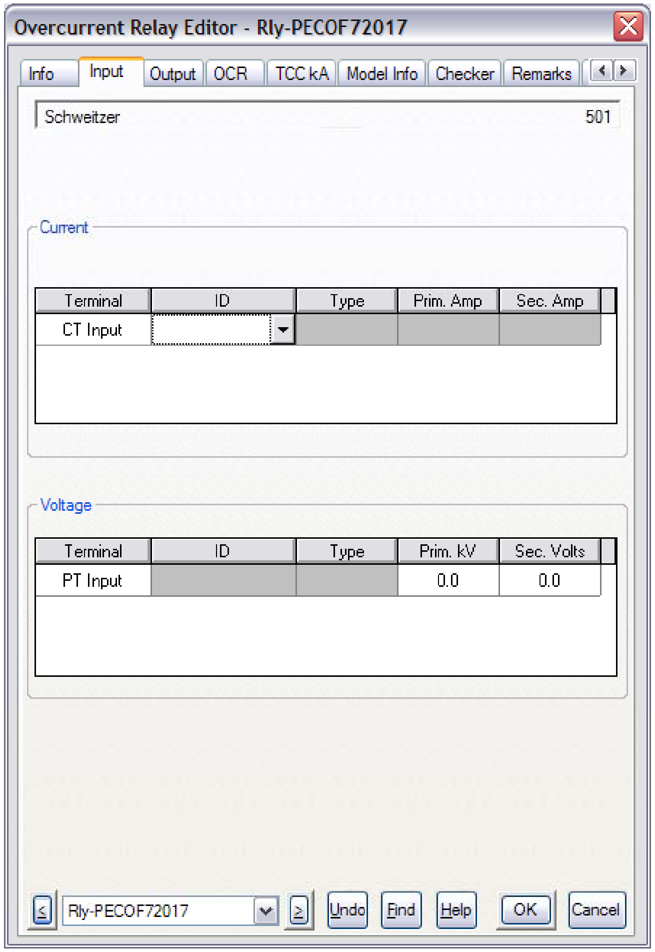
Overcurrent Relay Editor - Rly-PECOF72017
Info
Input
Output
OCR
TCC kA
Model Info
Checker
Remarks
Current
Voltage
Undo
Find
Help
OK
Cancel

Schweitzer 501

Current

Terminal	ID	Type	Prim. Amp	Sec. Amp
CT Input				

Voltage

Terminal	ID	Type	Prim. kV	Sec. Volts
PT Input			0.0	0.0

Rly-PECOF72017

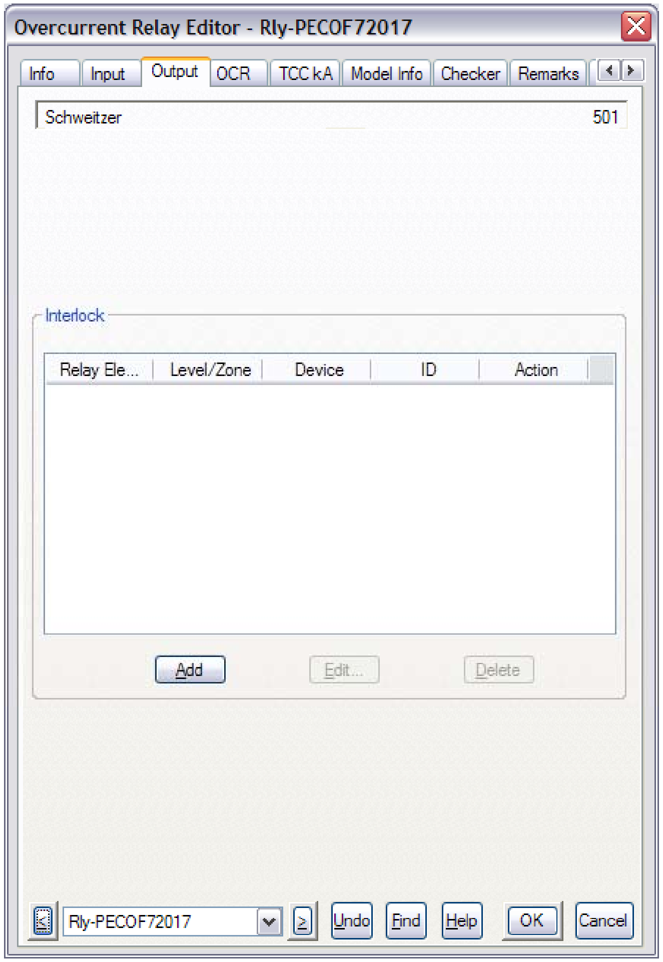
Overcurrent Relay Editor - Rly-PECOF72017
Info
Input
Output
OCR
TCC kA
Model Info
Checker
Remarks
Interlock
Add
Edit...
Delete
Undo
Find
Help
OK
Cancel

Schweitzer 501

Interlock

Relay Ele...	Level/Zone	Device	ID	Action

Rly-PECOF72017

2. Arcing Current is too Low

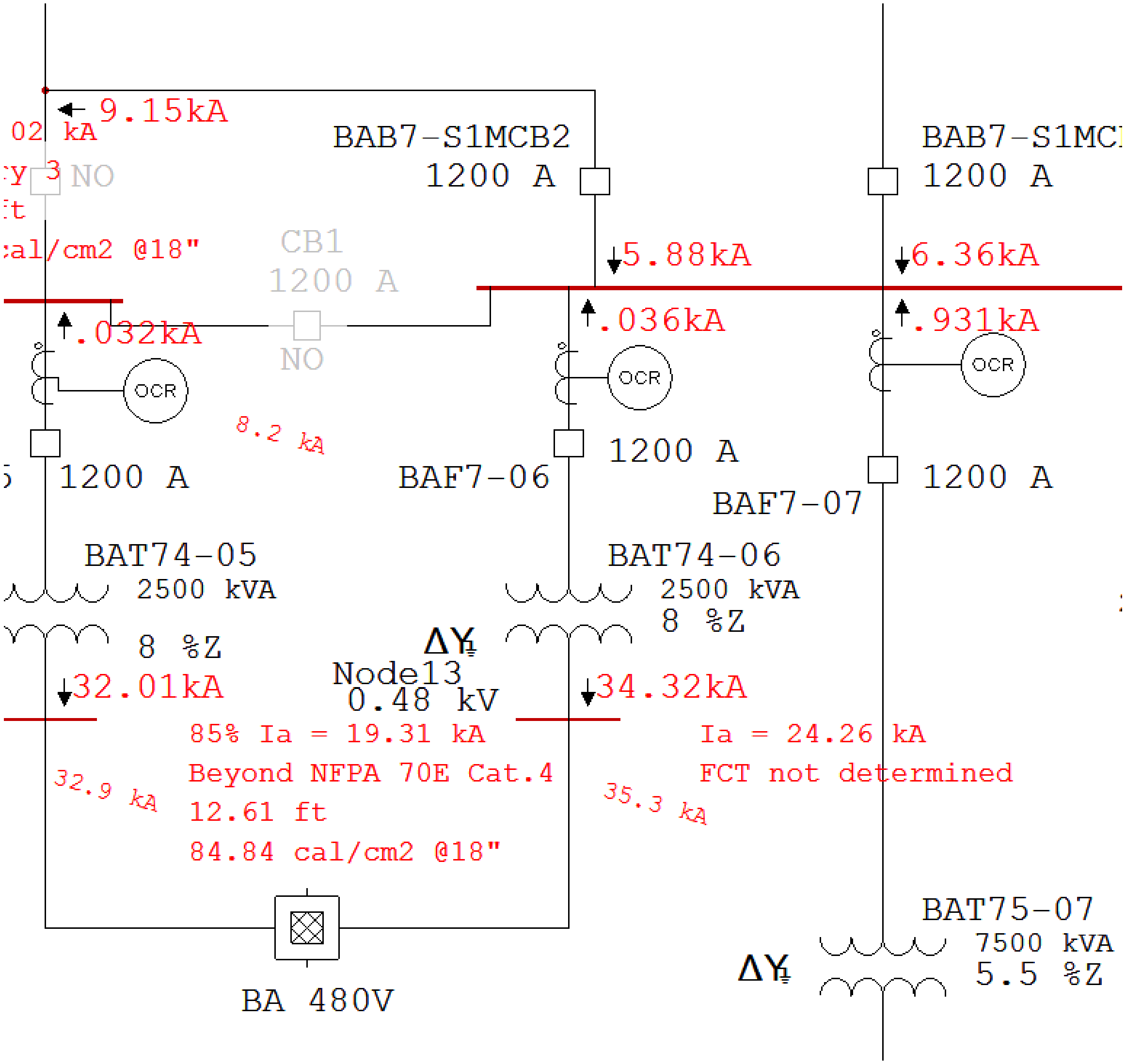
9.15kA
02 kA
3 NO
al/cm2 @18"
BAB7-S1MCB2
1200 A
BAB7-S1MC
1200 A
CB1
1200 A
NO
5.88kA
6.36kA
.032kA
.036kA
.931kA
OCR
OCR
OCR
8.2 kA
1200 A
BAF7-06
1200 A
BAF7-07
1200 A
BAT74-05
2500 kVA
8 %Z
BAT74-06
2500 kVA
8 %Z
ΔY
Node13
0.48 kV
32.01kA
34.32kA
85% Ia = 19.31 kA
Beyond NFPA 70E Cat.4
12.61 ft
84.84 cal/cm2 @18"
Ia = 24.26 kA
FCT not determined
32.9 kA
35.3 kA
BA 480V
BAT75-07
7500 kVA
5.5 %Z
ΔY

2.a Find the Arcing Current Contribution

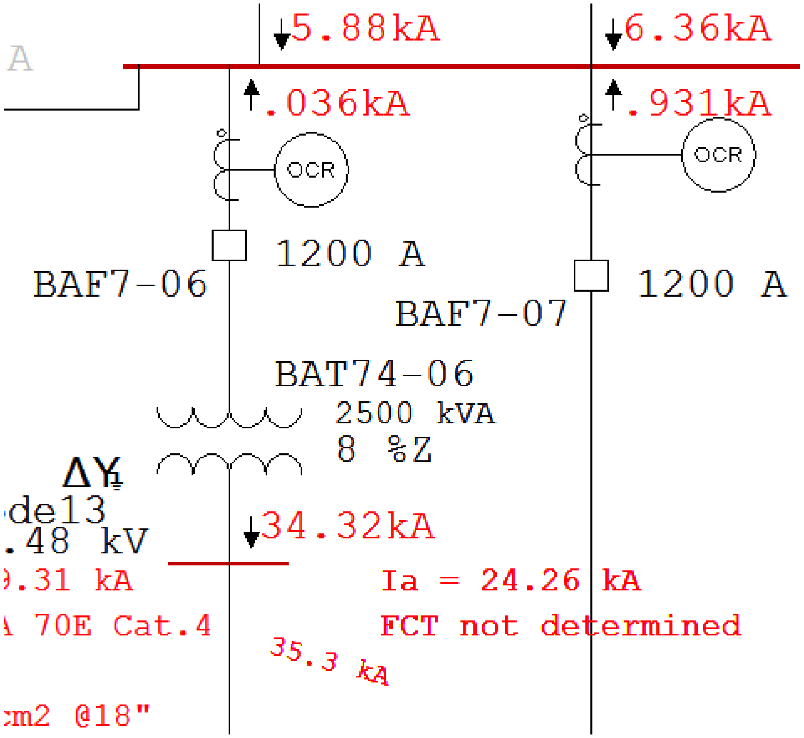

5.88kA
6.36kA
A
.036kA
.931kA
OCR
OCR
1200 A
BAF7-06
1200 A
BAF7-07
BAT74-06
2500 kVA
8 %Z
ΔY
de13
.48 kV
.31 kA
70E Cat.4
34.32kA
Ia = 24.26 kA
FCT not determined
35.3 kA
m2 @18"

To determine the arcing current you need to take the ratio of the SC contribution over the total SC current. Multiply the total arcing current times the ratio

(34.32 kA/35.3 kA)*24.26 kA = 23.58 kA

Now convert to the primary base kV

23.58 kA * (0.48kV/13.2kV) = 0.857 kA

2.b Plot the Arcing Current to find FCT

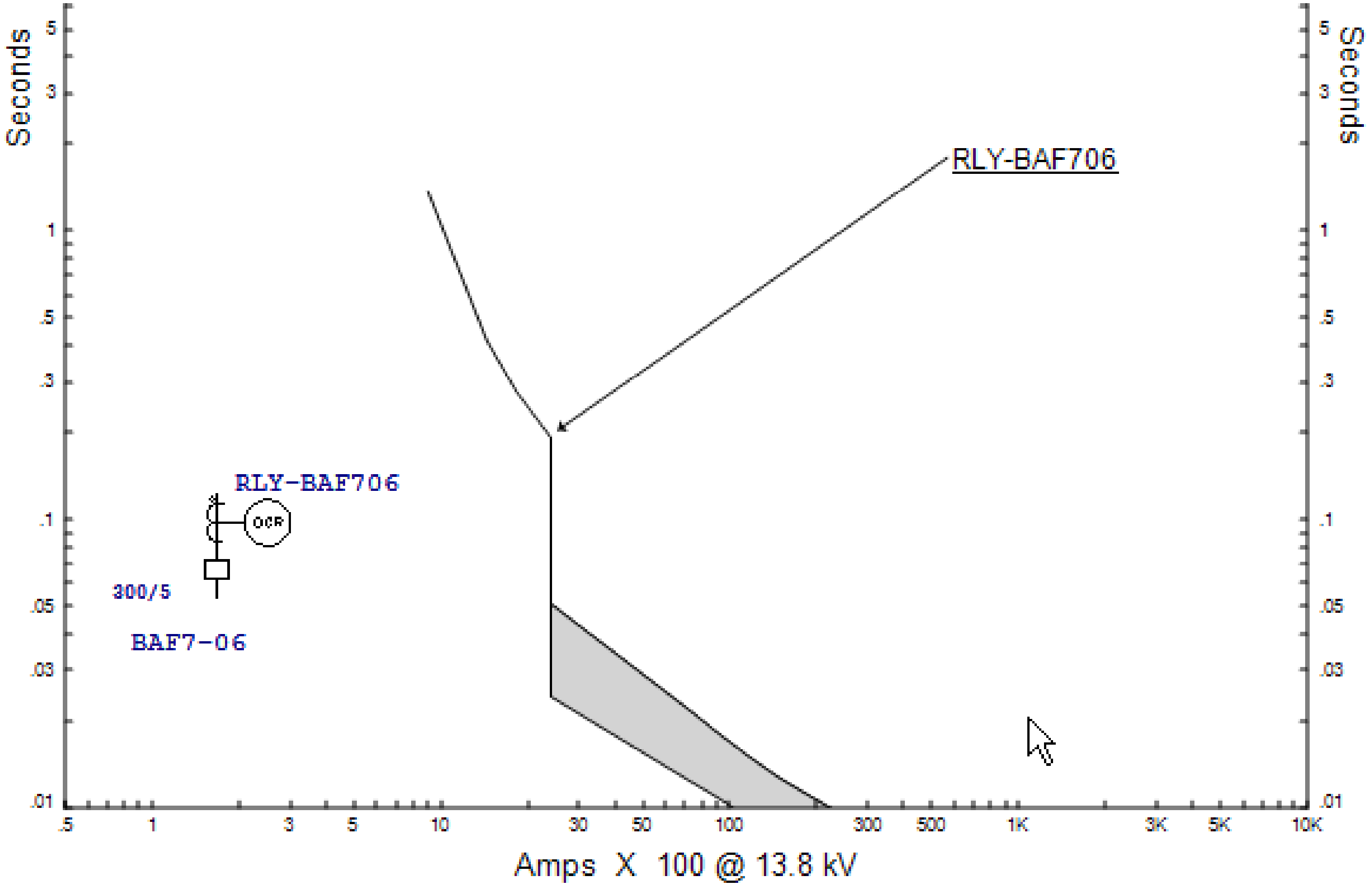

3. Source PD is outside search capability

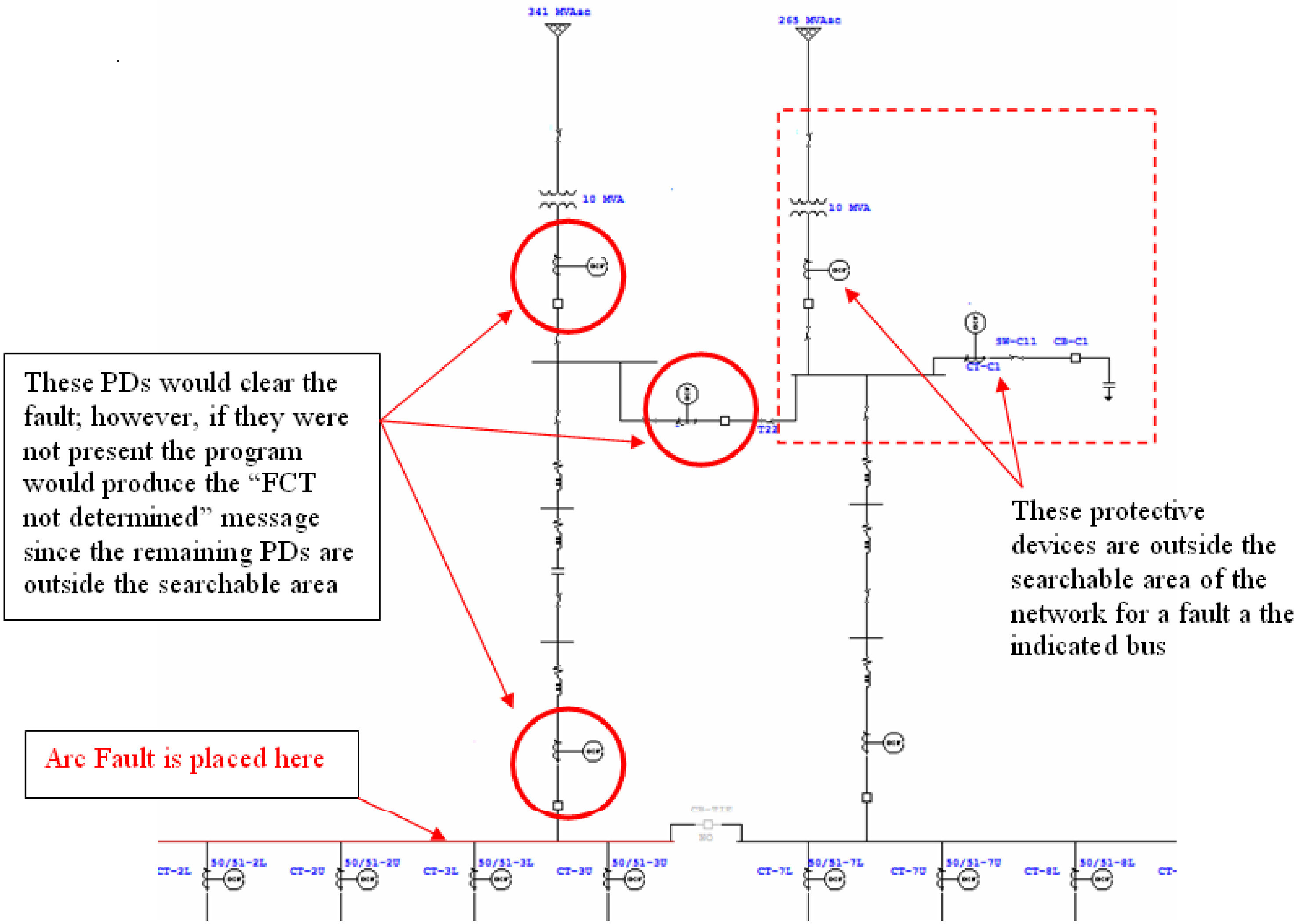
341 MVAsc
265 MVAsc
10 MVA
10 MVA
SW-C11
CB-C1
CT-C1
T22
CB-TIE
NO
CT-2L
50/51-2L
CT-2U
50/51-2U
CT-3L
50/51-3L
CT-3U
50/51-3U
CT-7L
50/51-7L
CT-7U
50/51-7U
CT-8L
50/51-8L
CT-

These PDs would clear the fault; however, if they were not present the program would produce the "FCT not determined" message since the remaining PDs are outside the searchable area

Arc Fault is placed here

These protective devices are outside the searchable area of the network for a fault a the indicated bus

4. Source PD is outside search capability

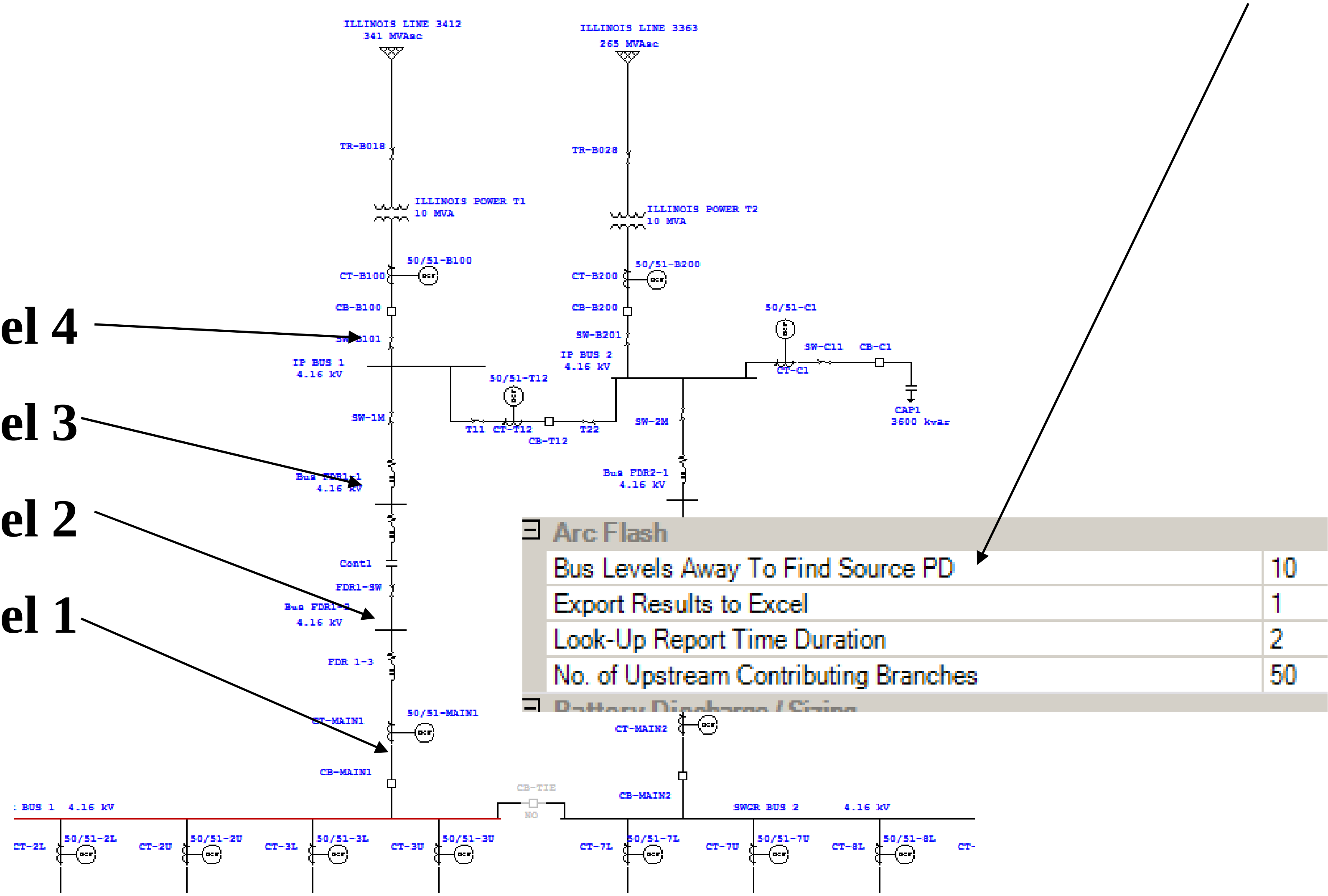
ILLINOIS LINE 3412
341 MVAsc
ILLINOIS LINE 3363
265 MVAsc
TR-B018
TR-B028
ILLINOIS POWER T1
10 MVA
ILLINOIS POWER T2
10 MVA
50/51-B100
CT-B100
50/51-B200
CT-B200
CB-B100
CB-B200
50/51-C1
SW-B101
SW-B201
SW-C11
CB-C1
IP BUS 1
4.16 kV
IP BUS 2
4.16 kV
CT-C1
50/51-T12
SW-1M
T11
CT-T12
T22
CB-T12
SW-2M
CAP1
3600 kvar
Bus FDR1-1
4.16 kV
Bus FDR2-1
4.16 kV
Cont1
FDR1-SW
Bus FDR1-2
4.16 kV
FDR 1-3
CT-MAIN1
50/51-MAIN1
CB-MAIN1
CT-MAIN2
CB-MAIN2
CB-TIE
NO
BUS 1 4.16 kV
SWGR BUS 2
4.16 kV
CT-2L
50/51-2L
CT-2U
50/51-2U
CT-3L
50/51-3L
CT-3U
50/51-3U
CT-7L
50/51-7L
CT-7U
50/51-7U
CT-8L
50/51-8L
CT-
OCR

Level 4

Level 3

Level 2

Level 1

Arc Flash

Bus Levels Away To Find Source PD	10
Export Results to Excel	1
Look-Up Report Time Duration	2
No. of Upstream Contributing Branches	50

5 & 6. IEEE Limitations

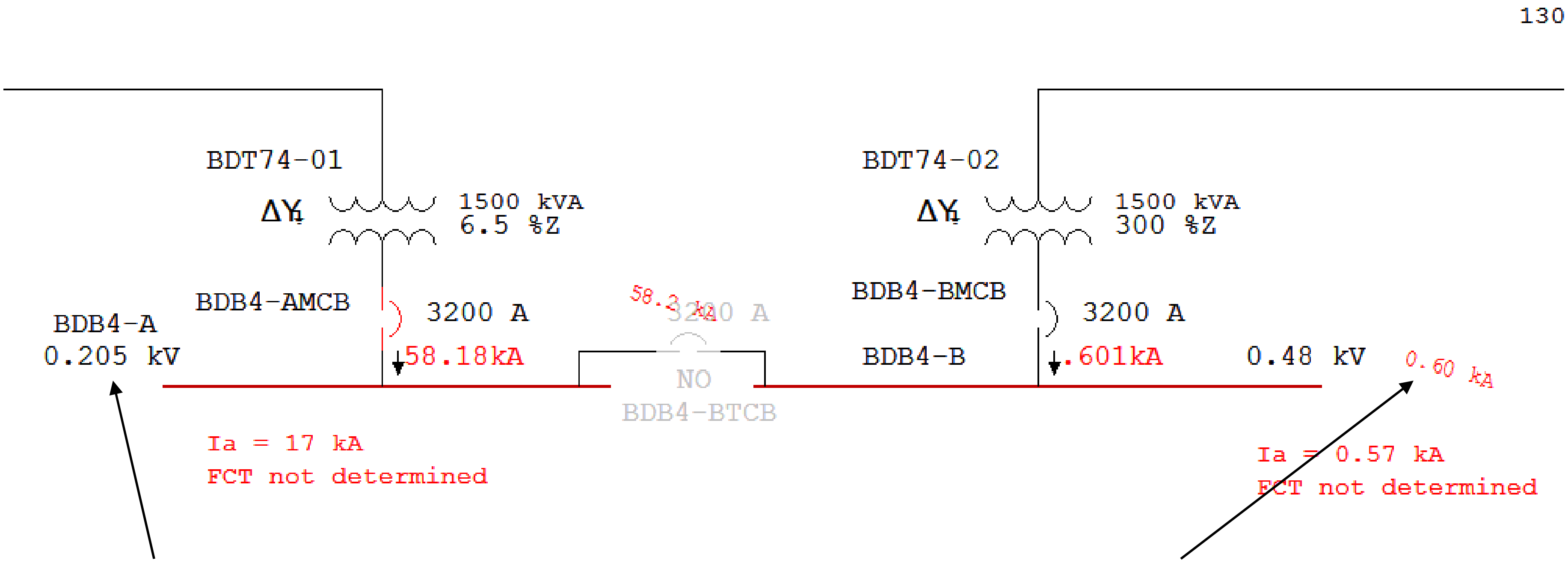
130
BDT74-01
ΔY
1500 kVA
6.5 %Z
BDB4-AMCB
3200 A
BDB4-A
0.205 kV
58.18kA
Ia = 17 kA
FCT not determined
58.3 kA
3200 A
NO
BDB4-BTCB
BDT74-02
ΔY
1500 kVA
300 %Z
BDB4-BMCB
3200 A
BDB4-B
.601kA
0.48 kV
0.60 kA
Ia = 0.57 kA
FCT not determined

Bus Nominal kV is too low

Short-circuit current is too low or too high

7. BUS UD FCT is set to zero

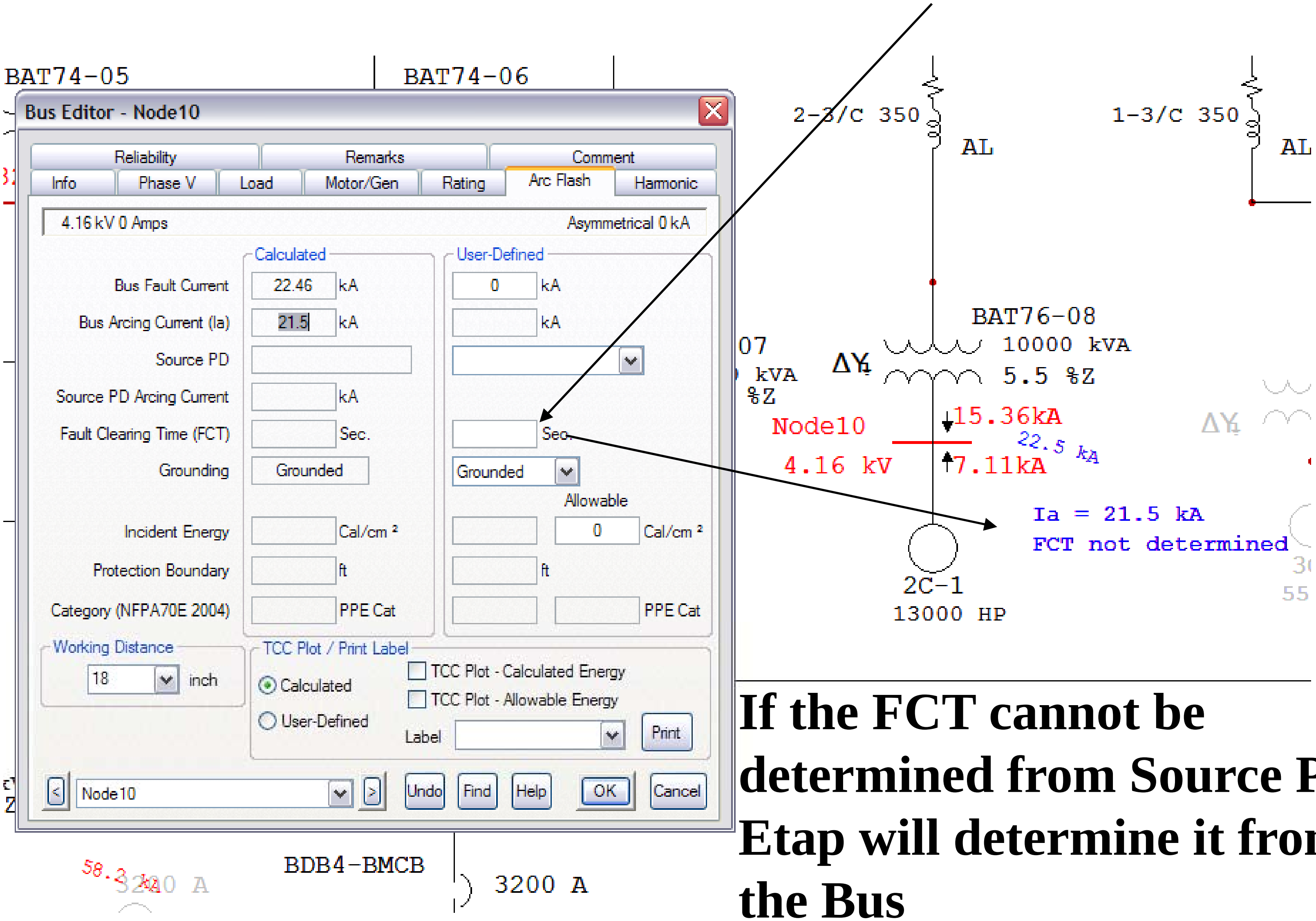

Bus Editor - Node10

Reliability
Remarks
Comment
Info
Phase V
Load
Motor/Gen
Rating
Arc Flash
Harmonic

4.16 kV 0 Amps — Asymmetrical 0 kA

	Calculated		User-Defined			
Bus Fault Current	22.46	kA	0	kA		
Bus Arcing Current (Ia)	21.5	kA		kA		
Source PD						
Source PD Arcing Current		kA				
Fault Clearing Time (FCT)		Sec.		Sec.		
Grounding	Grounded		Grounded			
					Allowable	
Incident Energy		Cal/cm ²			0	Cal/cm ²
Protection Boundary		ft		ft		
Category (NFPA70E 2004)		PPE Cat				PPE Cat

Working Distance: 18 inch

TCC Plot / Print Label: ● Calculated ○ User-Defined ☐ TCC Plot - Calculated Energy ☐ TCC Plot - Allowable Energy Label:

Print
Node10
Undo
Find
Help
OK
Cancel
BAT74-05
BAT74-06
2-3/C 350
AL
1-3/C 350
AL
BAT76-08
10000 kVA
5.5 %Z
07
kVA
%Z
ΔY
Node10
4.16 kV
15.36kA
22.5 kA
7.11kA
Ia = 21.5 kA
FCT not determined
2C-1
13000 HP
58.3 kA
3200 A
BDB4-BMCB
3200 A

If the FCT cannot be determined from Source PD Etap will determine it from the Bus